* REVISIONS				
LTR	DESCRIPTION	DATE	REVISED	APPROVED

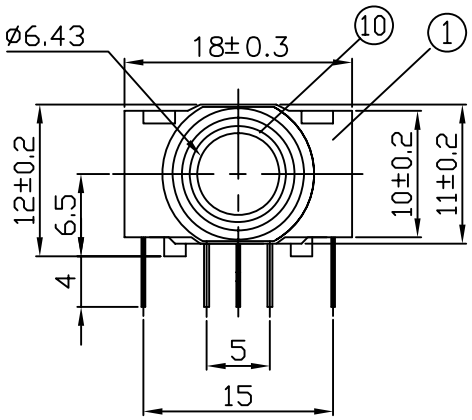

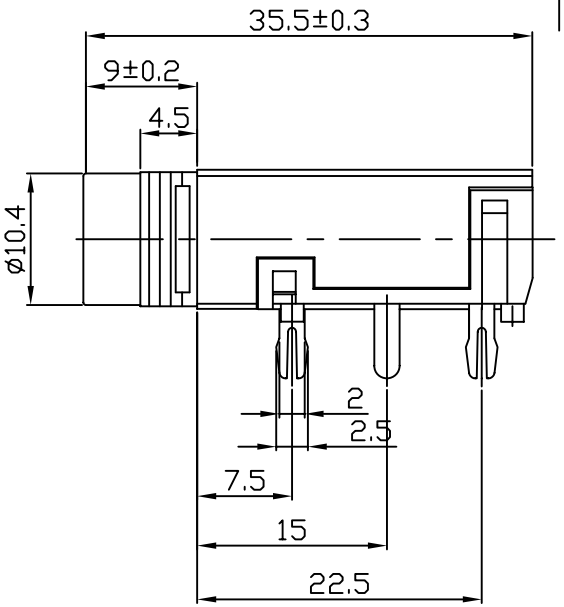

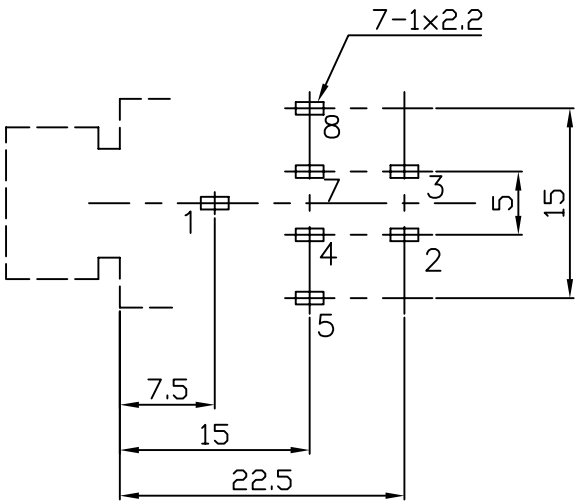

T:1.6 Dimensions of PC board holes

Tolerance : ±0.05(Printed-top view)

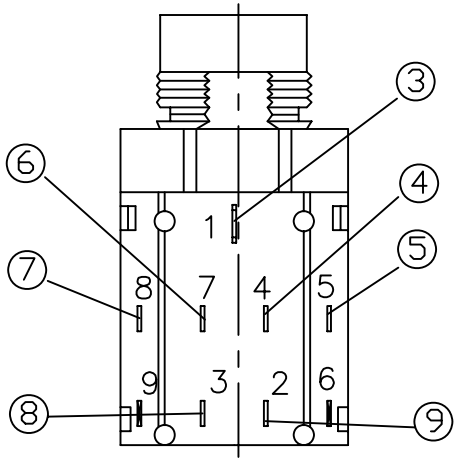

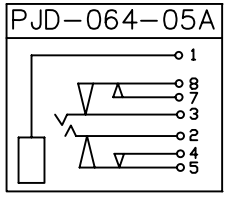

LEAD FREE

LTR	PART NAME	QTY	MATERIAL	REMARK
10	NUT	1	COPPER ALLOY t=0.4	Ni PLATED
9	TERMINAL	1	C5191 t=0.4	Ag PLATED
8	TERMINAL	1	C5191 t=0.4	Ag PLATED
7	RING SPRING	1	C5191 t=0.3	Ag PLATED
6	EARTH TERMINAL	1	C2680 t=0.4	Ag PLATED
5	BREAK TERMINAL	1	C5191 t=0.3	Ag PLATED
4	TIP SPRING	1	C2680 t=0.4	Ag PLATED
3	EARTH TERMINAL	1	C5191 t=0.3	Ag PLATED
2	COVER	1	ABS	UL-94HB(BLACK)
1	HOUSING	1	ABS	UL-94HB(BLACK)

DWN	LILY	DATE	2013.08.23	3RD ANGLE PROJECTION	NAME PHONE JACK
CHKD	ANDY	DATE	2013.08.23		CAT. NO. PJD-064-05A
APVD	JON	DATE	2013.08.23	UNIT: mm	
Jing Cheng Electronics Co., Ltd.					DWN.NO. B-064-05 001

UNLESS OTHERWISE SPECIFIED, TOLERANCE ON DECIMAL: ±0.3