✳ REVISIONS				
LTR	DESCRIPTION	DATE	REVISED	APPROVED

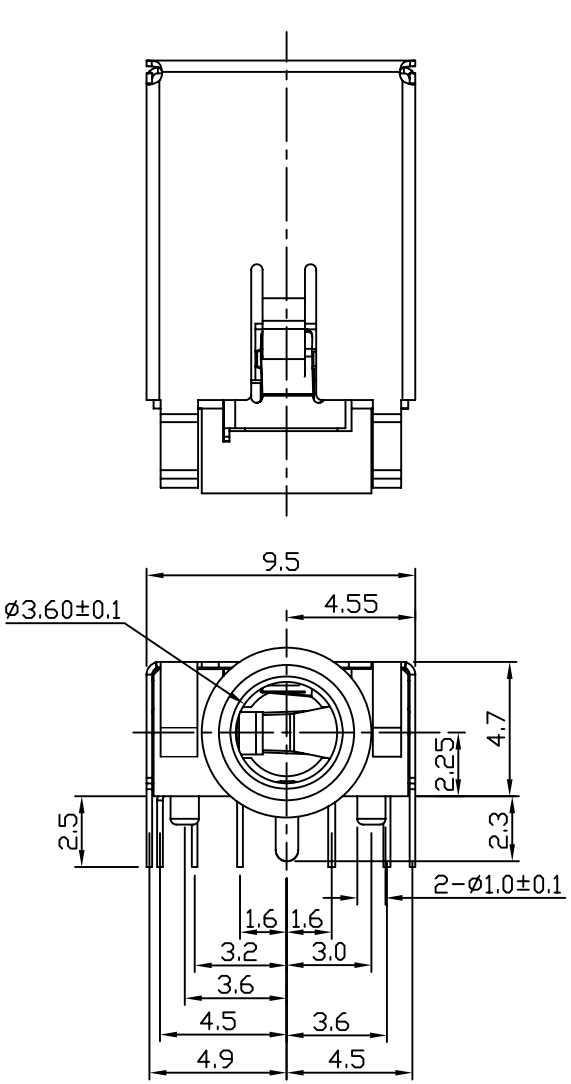

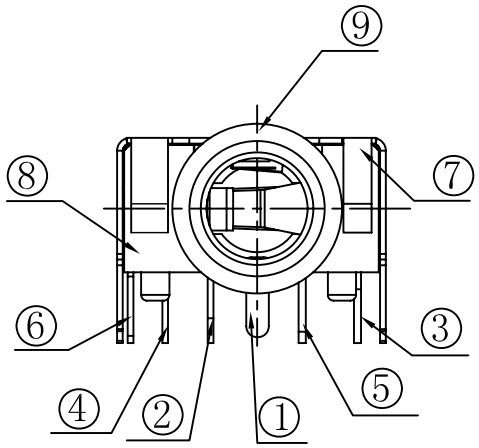

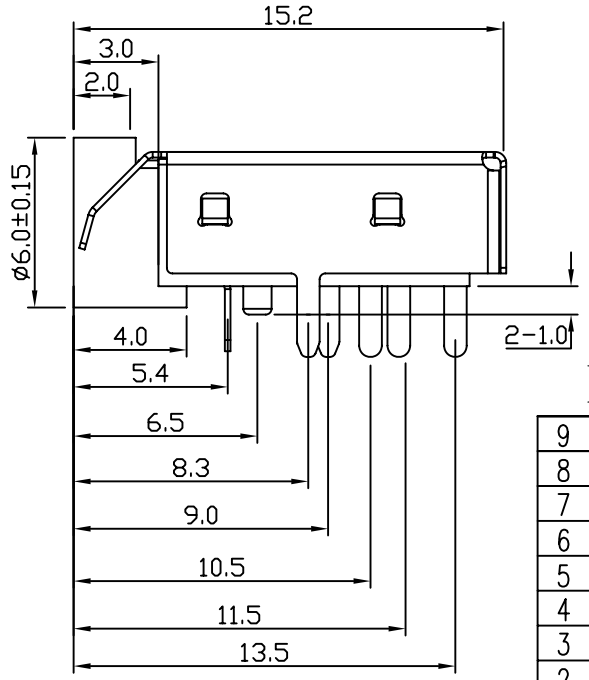

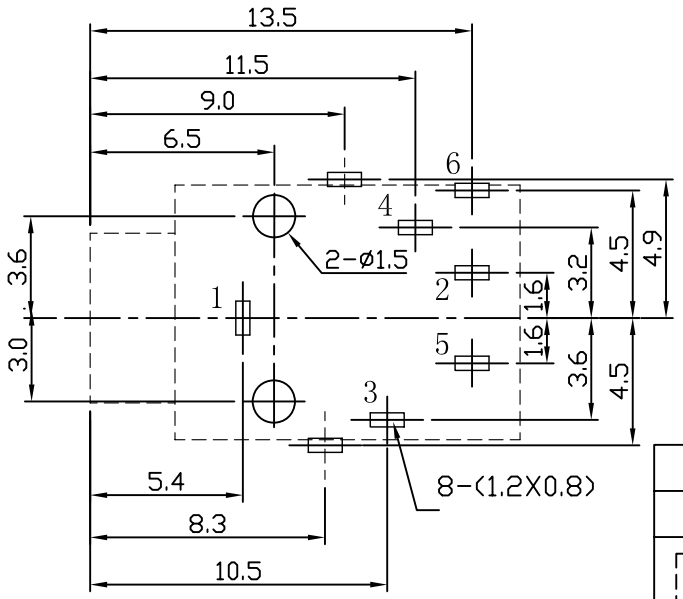

T:1.6 Dimensions of PC board holes

Tolerance : ±0.05(Printed-top view)

SCHEMATIC

PJD-035-36S2A

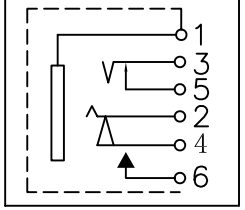

LEAD FREE

LTR	PART NAME	QTY	MATERIAL		REMARK
9	AXIS SUPPORT	1	H59		Ni PLATED
8	HOUSING	1	PA66		GREEN
7	COAT	1	SUS301	t=0.20	Ni PLATED
6	TERMINAL 6#	1	C5191	t=0.20	Ag PLATED
5	TERMINAL 5#	1	C5191	t=0.20	Ag PLATED
4	TERMINAL 4#	1	C2680	t=0.20	Ag PLATED
3	TERMINAL 3#	1	C5191	t=0.25	Ag PLATED
2	TERMINAL 2#	1	C5191	t=0.20	Ag PLATED
1	TERMINAL 1#	1	C5191	t=0.20	Ag PLATED

DWN	LILY	DATE	2013.05.20	3RD ANGLE PROJECTION	NAME MINIATURE JACK
CHKD	ANDY	DATE	2013.05.20		CAT. NO. PJD-035-36S2A01
APVD	JON	DATE	2013.05.20	UNIT: mm	
JKCR Electronics Co., Ltd.					DWN.NO. A-035-36 001

UNLESS OTHERWISE SPECIFIED, TOLERANCE ON DECIMAL: ±0.3