* RoHS COMPLIANT *

✳REVISIONS				
LTR	DESCRIPTION	DATE	REVISED	APPROVED

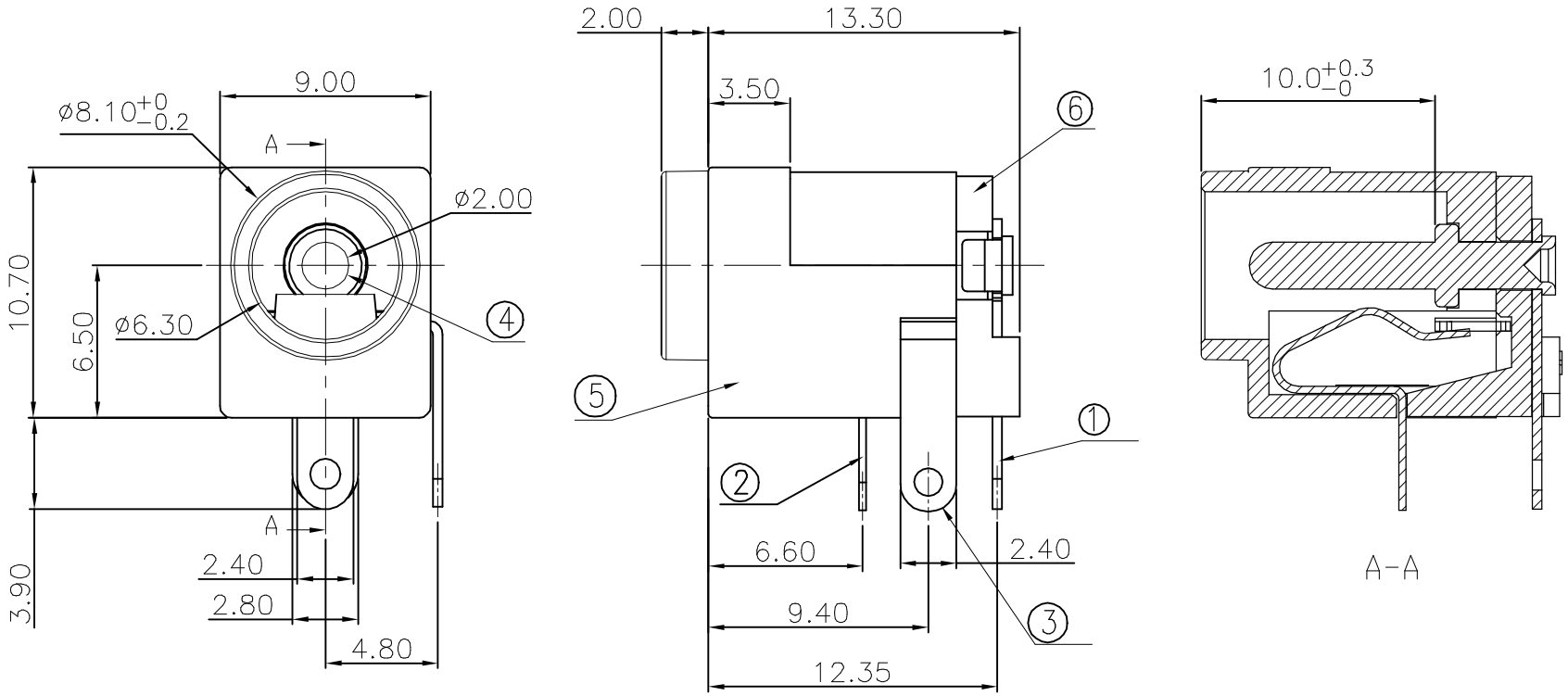

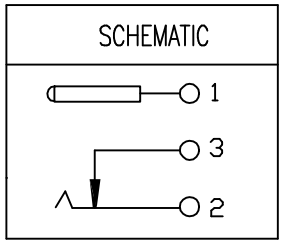

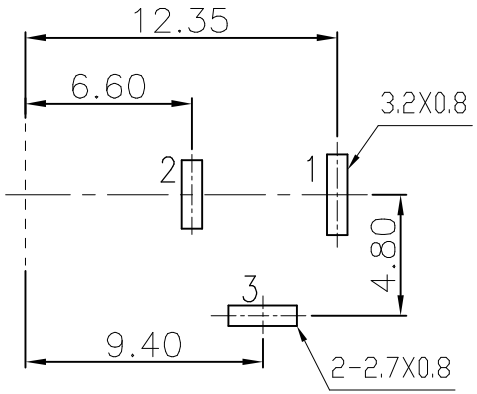

T:1.6 Dimensions of PC board holes

Tolerance : ±0.05(Printed-top view)

UNLESS OTHERWISE SPECIFIED, TOLERANCE ON DECIMAL:±0.3

LTR	PART NAME	QTY	MATERIAL	REMARK
6	HOUSING	1	PBT	UL-94V0(BLACK)
5	COVER	1	PBT	UL-94V0(BLACK)
4	PIN	1	COPPER ALLOY	Ni PLATED
3	TERMINAL	1	C2680 t=0.4	Sn PLATED
2	TERMINAL	1	C5191 t=0.3	Sn PLATED
1	TERMINAL	1	C2680 t=0.4	Sn PLATED

DWN	LILY	DATE	2023.11.29	3RD ANGLE PROJECTION	NAME DC POWER JACK
CHKD	ANDY	DATE	2023.11.29		CAT. NO. DCD-020-04PP2A
APVD	JON	DATE	2023.11.29	UNIT: mm	
JKCR Electronics Co., Ltd.					DWN.NO. A-020-04PP2 002